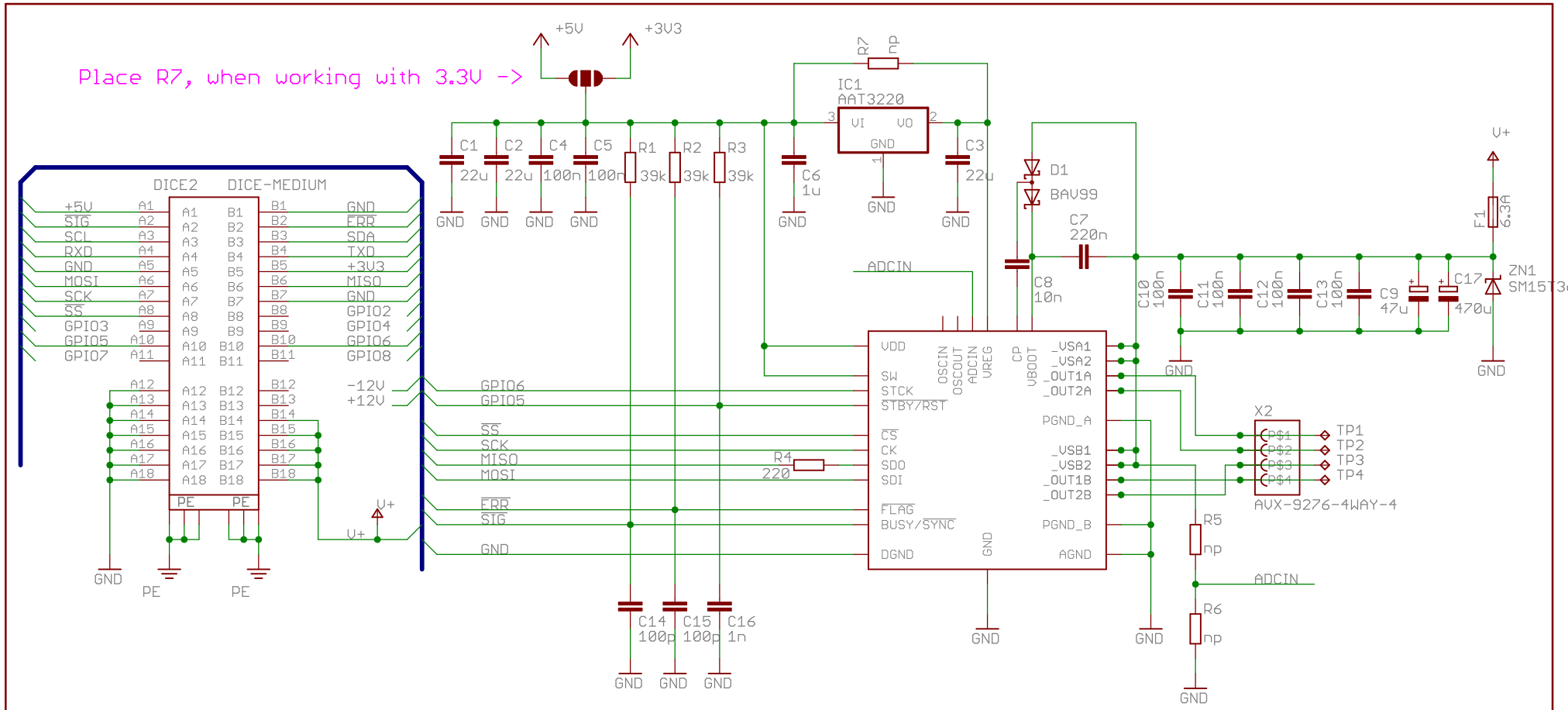

DICE-L6470

TITLE: DICE-L6470PD-REV1

Document Number:

REV: 1

Date: 16.05.2014 17:00:17

Sheet: 1/1

DICE
NO PC
2PrintBeta

Copyright (c) Konrad Meyer 2014 - 2PrintBeta

Licensed under CERN OHL V1.2